# SPIRENT TESTCENTER

# MULTIPLE SPANNING TREE BASE PACKAGE

Convergence is creating a new generation of integrated network devices and services that are much more complex than ever before. The resulting increased complexity, scarcity of testing skills and architectural shortcomings in current test systems are hurting the ability of manufacturers to ship products on time at escalating quality levels and slowing service providers' ability to deploy networks that get Quality of Experience (QoE) right the first time.

## INCREASE PRODUCTIVITY: GET THERE FASTER WITH SPIRENT TESTCENTER

- Easy to use GUI including an MST Region setup wizard
- Support for bi-directional control-plane capture and integrated support for optional real-time decoder (BPK-1029A) enables deep functional troubleshooting
- Test with Layer 2 and Layer 3 broadcast, unicast and multicast traffic
- Send thousands of unique Layer 2 streams to populate the device under test's MAC address table
- Real-time statistics and graphical result screens
- Capability to log real-time exchange of protocol messaging
- New analyzer provides receive filtering for any user-specified field including source/destination address or protocol port number
- Integrated Analyzer with the unique HyperFilters™ technology enables users to receive, inspect and accumulate statistics at wire rate based on up to five fields in each received frame per port.

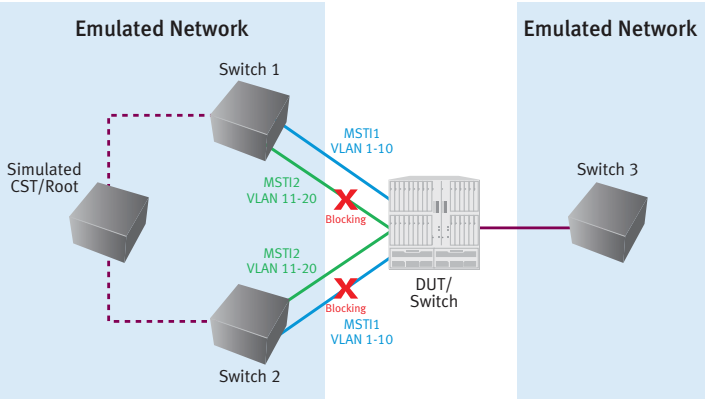


Spirent can help you address this challenge with Spirent TestCenter™ 2.0 with its innovative Inspire Architecture™. Now you can create and execute more complex test cases in less time with the same resources—and scale tests higher while debugging problems faster. The results: lower CAPEX and OPEX, faster time to market, greater market share and higher profitability.

The Multiple Spanning Tree Base Package provides the emulation of Multiple Spanning Tree (MST) Protocol as defined by IEEE Standard 802.1s-2002 and 802.1q-2003. This package works seamlessly within Spirent TestCenter, leveraging ease of use, interactive capability and meaningful results presentation. This module supports Multiple Spanning Tree functional and performance tests for Layer 2 loop prevention, load balancing and convergence. While the appropriate protocol messaging is emulated, Layer 2 traffic can also be generated to verify the device under test's (DUT) port state and forwarding performance.

Because it is an integrated component of Spirent TestCenter, this package can work together with other Spirent TestCenter components to deliver easy, consistent TCL support for all key metropolitan and enterprise protocols including spanning tree, VLAN, DHCP, QoS, multicast, IPv4/IPv6 and routing. Spirent TestCenter provides optional RFC-based benchmarking methodologies for testing Layer 2 and Layer 3 performance.

This software package leverages Spirent's new Inspire Architecture which dramatically increases productivity and reduces overall time-to-test.

# MULTIPLE SPANNING TREE BASE PACKAGE

## APPLICATIONS

Underlying protocols such as Multiple Spanning Tree can affect performance of a network; especially networks carrying delay-sensitive traffic such as triple play voice, video and data. Network equipment manufacturers, service providers and large enterprises need the ability to simulate various Layer 2 network scenarios. Subsequently, the impact Multiple Spanning Tree has on convergence times, forwarding performance and overall reliability should be assessed.

- Evaluate functionality of Multiple Spanning Tree implementations in bridges, switches and routers
- Evaluate key performance characteristics of bridges, switches and routers under typical or extreme traffic load conditions for minutes, hours, or days with concurrent spanning tree messaging
- Determine scalability and reliability of Multiple Spanning Tree designs and implementations on large-scale switching systems
- Perform comparative analysis of bridges, switches and routers with Multiple Spanning Tree and transit network traffic during product development cycles or vendor comparisons

## BENEFITS

- **Improve product/service reliability:** Scalability of protocol emulation allows the user to emulate very large networks and find issues in the lab before a service is deployed
- **Reduce cost:** Comprehensive protocol support allows the user to test with a single platform and single application
- **Increase productivity:** Reduce the learning curve with an easy-to-use GUI incorporating logical layout, configuration wizards and configurable views for setup and results. Spirent's new Extreme Automation™ provides easy one-step GUI to Script support via export to TCL.
- **Reduce time to test:** Test and configuration wizards allow quick setup; capture functionality, protocol messaging and live status views support easy troubleshooting with Spirent TestCenter's unique DebugOnDemand™ capability, which allows users to capture bidirectional control plane traffic without leaving the application environment—even in large-scale test configurations
- **Real-world network emulation:** Ability to emulate multiple protocols and schedule real-time protocol events

## TECHNICAL SPECIFICATIONS

### MSTP Features

- Supports up to 64 Multiple Spanning Tree Instances (MSTIs)
- MST Region setup wizard provides easy region naming and MST Instance to VLAN mapping
- Emulates MSTI internal regional interfaces
- Emulates MSTI regional boundary interfaces
- MSTI/CIST regional root bridge emulation
- Topology simulation emulating a regional root bridge behind a non-root bridge
- Test and verify root bridge election
- Verify the DUT's capability to process MST BPDUs
- Modify and test changing emulated bridge parameters including: bridge priority, MAC address, port number, port priority, path cost and hop count
- Modify and test changing timing parameters including: max age time, hello time, forward delay and hold count
- Send Topology Change Notifications (TCNs)
- Stop/start emulated bridges
- Monitor MST BPDU exchange with real-time event log
- Verify port state per MSTI
- Verify port role per MSTI
- Test the Multiple Spanning Tree algorithm
- Simulate topology changes to verify redundant paths
- Measure convergence time
- Capture and analyze control plane and data plane traffic
- Real-time statistics and graphical result screens
- Track results based on per port, per stream, or per user specified group

MSTP detailed results per instance

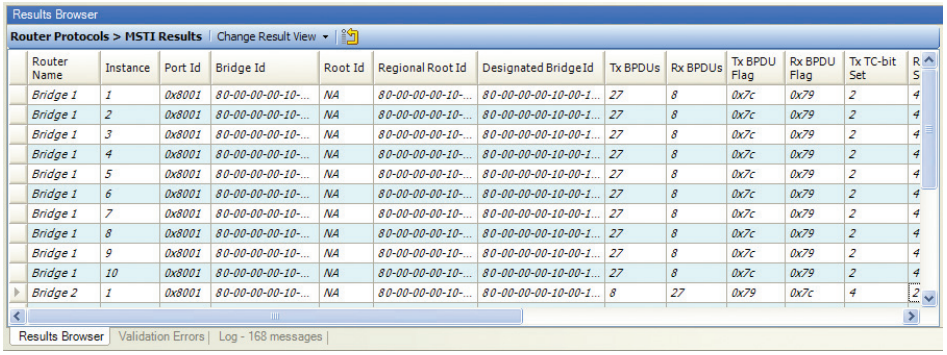


| Router Name | Instance | Port Id | Bridge Id | Root Id | Regional Root Id | Designated Bridge Id | Tx BPDUs | Rx BPDUs | Tx BPDU Flag | Rx BPDU Flag | Tx TC-bit Set | R S |
|---|---|---|---|---|---|---|---|---|---|---|---|---|
| Bridge 1 | 1 | 0x8001 | 80-00-00-00-10-... | NA | 80-00-00-00-10-... | 80-00-00-00-10-00-1... | 27 | 8 | 0x7c | 0x79 | 2 | 4 |
| Bridge 1 | 2 | 0x8001 | 80-00-00-00-10-... | NA | 80-00-00-00-10-... | 80-00-00-00-10-00-1... | 27 | 8 | 0x7c | 0x79 | 2 | 4 |
| Bridge 1 | 3 | 0x8001 | 80-00-00-00-10-... | NA | 80-00-00-00-10-... | 80-00-00-00-10-00-1... | 27 | 8 | 0x7c | 0x79 | 2 | 4 |
| Bridge 1 | 4 | 0x8001 | 80-00-00-00-10-... | NA | 80-00-00-00-10-... | 80-00-00-00-10-00-1... | 27 | 8 | 0x7c | 0x79 | 2 | 4 |
| Bridge 1 | 5 | 0x8001 | 80-00-00-00-10-... | NA | 80-00-00-00-10-... | 80-00-00-00-10-00-1... | 27 | 8 | 0x7c | 0x79 | 2 | 4 |
| Bridge 1 | 6 | 0x8001 | 80-00-00-00-10-... | NA | 80-00-00-00-10-... | 80-00-00-00-10-00-1... | 27 | 8 | 0x7c | 0x79 | 2 | 4 |
| Bridge 1 | 7 | 0x8001 | 80-00-00-00-10-... | NA | 80-00-00-00-10-... | 80-00-00-00-10-00-1... | 27 | 8 | 0x7c | 0x79 | 2 | 4 |
| Bridge 1 | 8 | 0x8001 | 80-00-00-00-10-... | NA | 80-00-00-00-10-... | 80-00-00-00-10-00-1... | 27 | 8 | 0x7c | 0x79 | 2 | 4 |
| Bridge 1 | 9 | 0x8001 | 80-00-00-00-10-... | NA | 80-00-00-00-10-... | 80-00-00-00-10-00-1... | 27 | 8 | 0x7c | 0x79 | 2 | 4 |
| Bridge 1 | 10 | 0x8001 | 80-00-00-00-10-... | NA | 80-00-00-00-10-... | 80-00-00-00-10-00-1... | 27 | 8 | 0x7c | 0x79 | 2 | 4 |
| Bridge 2 | 1 | 0x8001 | 80-00-00-00-10-... | NA | 80-00-00-00-10-... | 80-00-00-00-10-00-1... | 8 | 27 | 0x79 | 0x7c | 4 | 2 |

## KEY MEASUREMENTS/STATISTICS

**MSTP/MSTI Results Per Emulated Bridge**

- Instance
- Port ID
- Bridge ID
- Elected Root ID
- Elected Regional Root ID
- Designated Bridge ID
- TX/RX BPDUs
- TX/RX BPDU Flag
- TX/RX TC-bit Set
- TX/RX TC Ack
- TX/RX Proposals
- TX/RX TC Agree
- TX/RX Port Role
- TX/RX Port State

## RELATED STANDARDS

- IEEE 802.1s-2002, Multiple Spanning Trees
- IEEE 802.1w, Rapid Spanning Tree Protocol
- IEEE 802.1q-2003, Virtual Bridged Local Area Networks

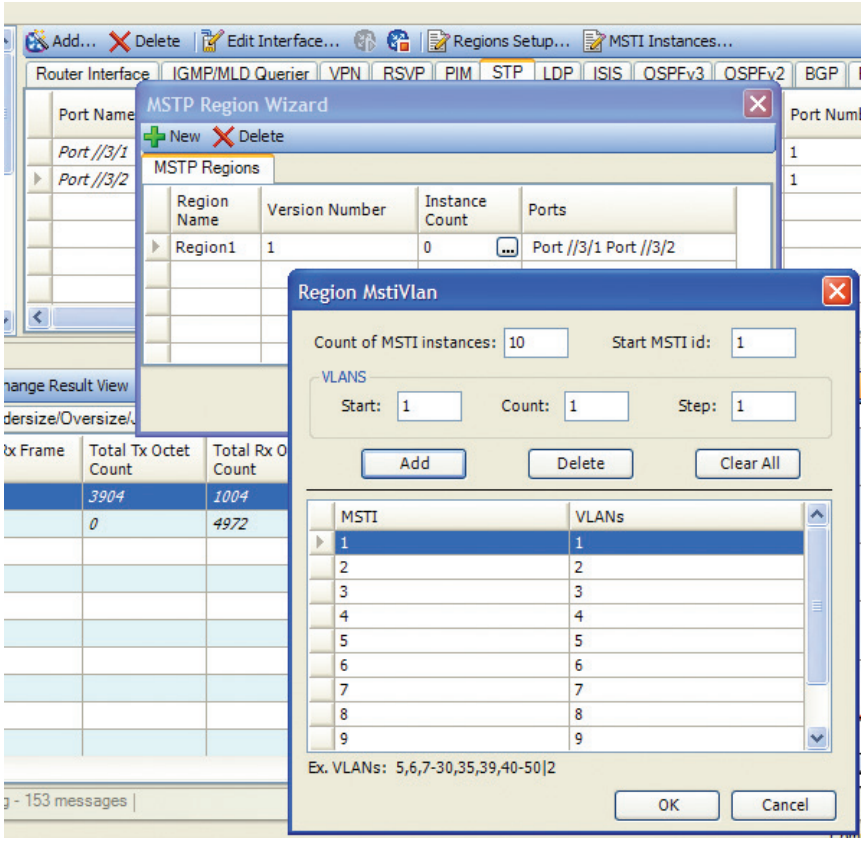


MSTP Region and MSTI configuration wizards

## SUPPORTED MODULES

Series 2000 modules provide higher performance than Series 1000 modules; contact your Spirent representative for details.

BPK-1014A supports all Spirent TestCenter test modules and personality cards.

## REQUIREMENTS

- Pentium® or greater PC running Windows® XP Professional SP2 with mouse/color monitor required for GUI operation. See Minimum PC Requirements section.
- One Ethernet cable and one 10/100/1000 Mbps Ethernet card installed in the PC
- A SPT-2000A Spirent 2U Chassis and Controller, SPT-5000A Spirent 5U Chassis and Controller or SPT-9000A Spirent 9U Chassis and Controller
- Operating system languages supported: English, French, German, Italian, Japanese, Korean, and Chinese (traditional and simplified)

## MINIMUM PC REQUIREMENTS

- Small Port System: 1-25 ports
  - 2.4GHz Pentium 4 or equivalent with 512MB of free RAM and 10GB of free disk
- Medium Port System: 26-75 ports
  - 3GHz Pentium 4 or equivalent with 2GB of RAM and 15GB of free disk space
- Large Port (75+ ports)
  - E6400 Intel® Core™ 2 Duo or equivalent with 3GB of RAM and 100GB of free disk space

## ORDERING INFORMATION

Part numbers ending in "A" indicate the standard performance version; those ending in "B" indicate the high performance version.

Multiple Spanning Tree Base Package A (P/N BPK-1014A)

| RELATED SPIRENT TESTCENTER SOFTWARE | |
|---|---|
| Product | Part Number |
| Packet Generator and Analyzer Base Package | BPK-1001A/B* |
| STP/RSTP Base Package A | BPK-1002A |
| Spirent TestCenter Enhanced Capture and Decode Base Package | BPK-1029A |

*Indicates a required package

## SPIRENT GLOBAL SERVICES

Spirent Global Services optimizes your productivity with Spirent TestCenter over a broad range of technologies:

### Professional Services

- Test lab optimization: Test automation engineering services
- Service deployment and service-level optimization: Vendor acceptance testing, SLA benchmarking, infrastructure and security validation
- Device scalability optimization: POC high-scalability validation testing

### Education Services

- Web-based training: 24 x 7 hardware and software training
- Instructor-led training: Hands-on methodology and product training
- Certifications: SCPA and SCPE certifications

### Implementation Services

- Optimized new customer productivity with up to three days of on-site assistance

Visit www.spirent.com/gs or contact your Spirent sales representative.

**AMERICAS** 1-800-SPIRENT • +1-818-676-2683 • sales@spirent.com

**EUROPE AND THE MIDDLE EAST** +44 (0) 1293 767979 • emeainfo@spirent.com

**ASIA AND THE PACIFIC** +86-10-8518-2539 • salesasia@spirent.com

© 2010 Spirent Communications, Inc. All of the company names and/or brand names and/or product names referred to in this document, in particular the name "Spirent" and its logo device, are either registered trademarks or trademarks pending registration in accordance with relevant national laws. All rights reserved. Specifications subject to change without notice. Rev. D 07/10