SPIRENT DLS

SPIRENT PHYSICAL LAYER SOLUTIONS

DLS-8240 EUROPEAN MIXED IMPEDANCE SIMULATOR

European xDSL Wireline Simulator

OVERVIEW

Increasing demand for high-bandwidth multimedia applications with integrated voice, data and video streams has been driving xDSL deployment. The requirement for high-speed transmission over the traditional copper network has driven the continuous advances in DSL technology. From a standardization viewpoint, this has been reflected in the introduction of the most recent DSL initiative—VDSL2. While VDSL2 is the next generation of VDSL1, it is also designed to ensure compatibility with existing access network solutions such as ADSL, ADSL2 and ADSL2+.

Network equipment manufacturers, chipset designers and service providers seek competitive advantage by being first to deliver reliable products or services to the market. The DLS-8240 line simulator allows users to test the impact input impedance has on a modem's performance by providing wire gauge types that have a wide range of cable impedances. Spirent solution users know that simulation of proper input impedance, delay/phase and insertion loss are key to delivering robust early product delivery to market. Each wire gauge type has a reach from 0-90m in 1-meter increments, allowing users to characterize very precisely the impact small changes in loop length have on a modem's performance. By combining various wire types that have a large variation in impedance, small changes in loop length will cause a shift in reflected frequencies to allow users to see the direct impact this has on a modem's performance.

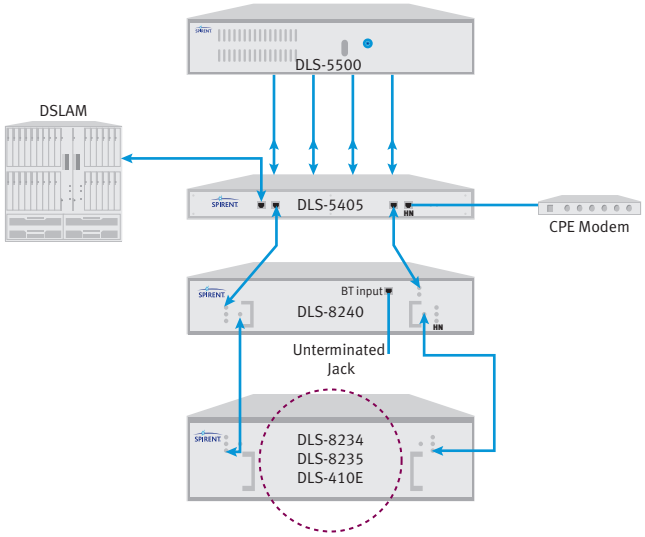

Configuration for Outside Plant mixed impedance testing

PHYSICAL LAYER TEST SETUP FOR EUROPEAN MIXED IMPEDANCE TESTING

- DLS-8240 can be configured to include a DSL Splitter for simulating In-Home loops OR testing/qualifying Splitters
- Splitter can be placed at both or either end of line
- Bridged Tap input to allow connection of additional termination/jack

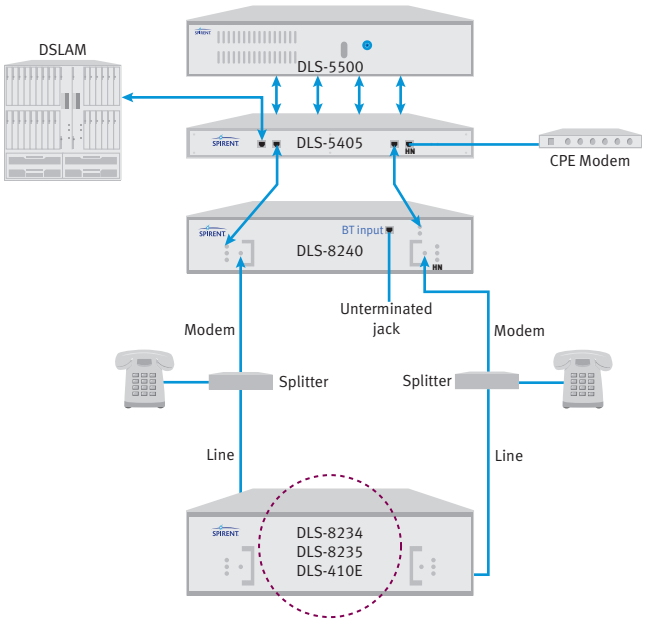

Configuration for In-Home testing

DLS-8240 EUROPEAN MIXED IMPEDANCE SIMULATOR

The DLS-8240 is designed for conformance/performance testing in accordance with ETSI TS 101 270 and interoperability testing for Broadband Forum TR-100 and WT-114. The DLS-8240 can be used to test xDSL chipsets that provide complete testing for rate-adaptive capabilities across all variations of ADSL and VDSL technologies including ADSL1, ADSL2, ADSL2+, VDSL1 and VDSL2. The figure below displays the DLS-8240 wireline simulator when connected to the front panel input ports of the DLS-8234, DLS-8235 or DLS-410E wireline solution. This allows the user to simulate various mixed impedance loop topologies including mixed impedance test requirements as outlined in Broadband Forum WT-114 requirements. The DLS-8240 allows extensive configurations and loop scenarios to allow the device to be positioned at both CO and CPE ends of any device.

EUROPEAN XDSL SIMULATION SYSTEM

Supports Broadband Forum WT-114 Test Loops

Permits simulation of European loops as specified by Broadband Forum (DSL Forum). When used with Spirent DLS V2E, users can be certain the device under test (DUT) has been designed to achieve peak performance while performing to specifications of the governing standards bodies. Being able to test to exacting standards in their own lab enables network equipment manufacturers to develop their product faster and with greater cost effectiveness. As a result, NEMs can differentiate themselves from their competition.

High Degree of Accuracy

The DLS-8240 system enables simulation of real-world environments. This provides the user with a high level of confidence that behavior of the equipment in the field is well understood.

Repeatability

Unlike in-house test setups, Spirent's wireline simulators enable the user to obtain consistent and repeatable results. This allows for the comparison of results regardless of time, location or test environment.

Control Interface

The DLS-8240—integrated with the DLS-8234 and DLS-8235 control software—provides an easy-to-use Windows-based GUI to make testing easier and more efficient in today's complex testing environments.

Designed for Precision Testing

Interoperability testing as specified at Broadband Forum (DSL Forum) requires highly accurate simulation of cable characteristics such as insertion loss, delay/phase and input impedance. Spirent is committed to providing world-leading accuracy devices to meet customer needs.

Integrated System

The product can easily be integrated into an automated test environment, allowing for control of the system in a customer's own scripting environment.

DLS Products Are The Worldwide Standard For Physical-Layer Equipment Used In Conformance, Performance And Interoperability Testing

With extensive market and technology expertise leveraged from Spirent's active participation at all major standards meetings including ETSI, ANSI, ITU-T, IEEE 802.3 and Broadband Forum (DSL Forum), Spirent DLS equipment provides the industry's most accurate and repeatable results to ensure your equipment is designed for peak performance.

INCLUDED WITH THE DLS-8240 SYSTEM

Your DLS-8240 European VDSL2 Wireline Simulator comes complete with the following:

Simulators

- DLS-8240 chassis (loop simulator)
- 1 x AC power cord
- DLS-8234/8240 Control Software
- DLS-8235/8240 Control Software
- Operating manual
- RS-232 and IEEE 488 cables
- Integrated compensation software

Noise

The recommended noise impairment solution to accompany the DLS-8240 Wireline Simulator products is the DLS-5500EV.

- DLS-5500 30MHz custom noise generator
- DLS-5405 VDSL2 noise injector

The DLS-8240 Simulator should be used with the DLS-8234, DLS-8235 or DLS-410E systems to test xDSL technologies including ADSL1, ADSL2, ADSL2+, VDSL1, VDSL2, etc. Please contact your Spirent representative for further information.

SPIRENT®

DLS-8240 EUROPEAN MIXED IMPEDANCE SIMULATOR

DLS-8240 SPECIFICATIONS	
Technology	Wireline simulation using passive circuits
Type of Wire	PE.04mm as defined in ETSI TS 101 388 Broadband Forum WT-114 (0-90m) 1-meter increments, TP150 as defined in ETSI TS 101 270, TP180 as defined in ETSI TS 101 270
Number of Conductors	Two (twisted pair)
Standard	ETSI TS 101 270, Broadband Forum WT-114
Simulated Loops	Proposed VDSL2 test loops
Bandwidth	DC to 30MHz continuous frequency response
Attenuation (Insertion Loss)	MAE ‹0.5 dB
Impedance	Complex varies over frequency with length; typically better than ±5%
Delay	Typically better than ±5%
Noise Floor	-150dBm/Hz within the VDSL2 range
DC Resistance	Typically better than ±10%
DC Rating (Steady State)	±200v between tip and ring, ring to ground, ring ground and 125mA
Power Supply	100-240VAC (50-60 Hz) adapter
Environmental	
Operating Temperature	+10° C to +40° C (50° F to 104° F)
Storage Temperature	-4° F to 158° F (-20° C to +70° C)
Humidity	90% (non-condensing) max.
Mechanical (Unit comes complete with rack mount brackets)	
Weight per Chassis	10kg maximum
Dimensions per Chassis	100mm x 452mm x 494mm (3.5” H x 18” W x 20” D)

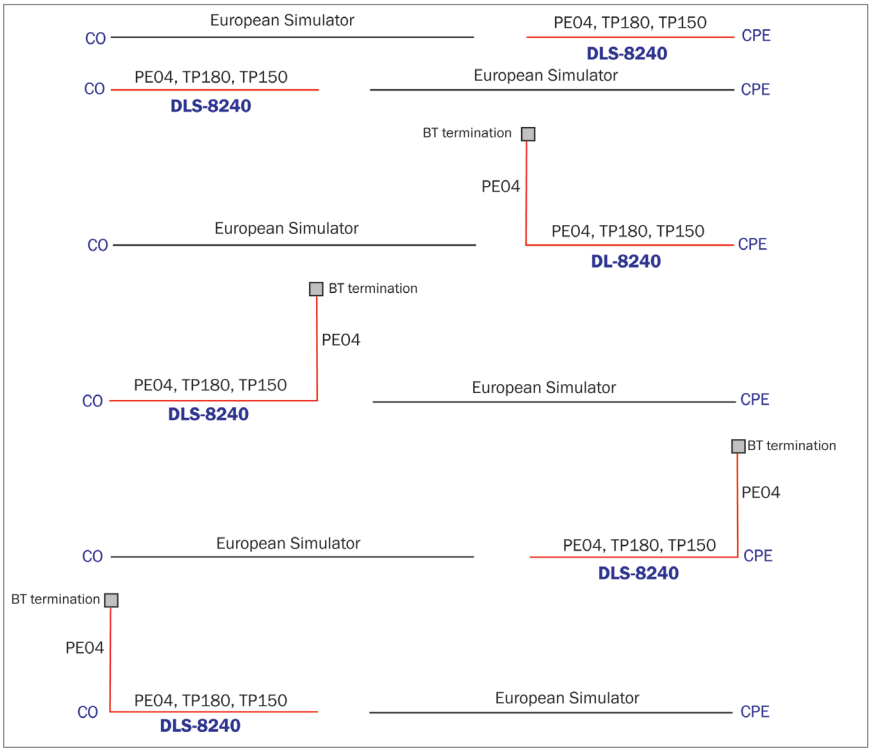

DLS-8240 European Loops—

All DLS-8240 wire gauge types are (0-90m) in length in 1-m increments

ORDERING INFORMATION

DLS-8240 Integrated System (P/N DLS8240)

SPIRENT GLOBAL SERVICES

Spirent Global Services provides a variety of professional services, support services and education services—all focused on helping customers meet their complex testing and service assurance requirements. For more information, visit the Global Services Web site at www.spirentcom.com/gs or contact your Spirent sales representative.

AMERICAS 1-800-SPIRENT • +1-818-676-2683 • sales@spirent.com

EUROPE AND THE MIDDLE EAST +44 (0) 1293 767979 • emeainfo@spirent.com

ASIA AND THE PACIFIC +86-10-8518-2539 • salesasia@spirent.com

© 2010 Spirent Communications, Inc. All of the company names and/or brand names and/or product names referred to in this document, in particular the name "Spirent" and its logo device, are either registered trademarks or trademarks pending registration in accordance with relevant national laws. All rights reserved. Specifications subject to change without notice. Rev. G 07/10