SPIRENT DLS

SPIRENT PHYSICAL LAYER SOLUTIONS

DLS-5800 NOISE GENERATOR/SEQUENCER SYSTEM

xDSL Next Generation Noise Testing Solution

Increasing demand for high-bandwidth multimedia applications with integrated voice, data and video streams has been driving xDSL deployment. The requirement for high-speed transmission over the traditional copper network has driven the continuous advances in DSL technology. The Spirent DLS-5800 xDSL noise generator/sequencer together with the DLS-5410DC noise injection unit is Spirent's next generation noise impairment platform developed to meet current and future DSL testing requirements. The DLS-5800 can also be used with a new mini DLS-5409 noise injector for high density wireline noise injection testing.

The DLS-5800/5410DC Integrated System is designed for conformance/performance/interoperability testing in accordance with xDSL standards bodies such as ITU-T, Broadband Forum, ATIS and ETSI testing requirements. As xDSL impairment testing requirements continue to evolve increased demand for noise generators capable of simulating Impulsive, RFI, and Fluctuating noise conditions has driven the need for the DLS-5800/5410DC next generation noise platform. New chipset features such as DSM (Dynamic Spectrum Management) and improved INP (impulse noise protection) continue to evolve and have extensive testing requirements. The DLS-5800/5410DC introduces several new features one of these features is a frame sequencer. The DLS-5800 sequencer allows users to build a series of "Frames" which contain user defined noise impairments as specified by the user.

These "Frames" can then be stitched together and played back in a user defined pattern seamlessly. The DLS-5800/5410DC can also inject impairments in both "Common" and "Differential" mode simultaneously. Many real world noise conditions such as Impulse noise appear as Common mode behaviour on the line, these noise conditions can now be combined with differential mode noise to offer significant flexibility in testing DSL performance. The DLS-5800/5410DC also introduces several expansion slots to allow users to expand the noise generator capabilities when needed. Users can upgrade the base 2 noise card (8 output) system expandable upto 6 noise cards. Providing a total of (24 outputs) per DLS-5800 noise generation system.

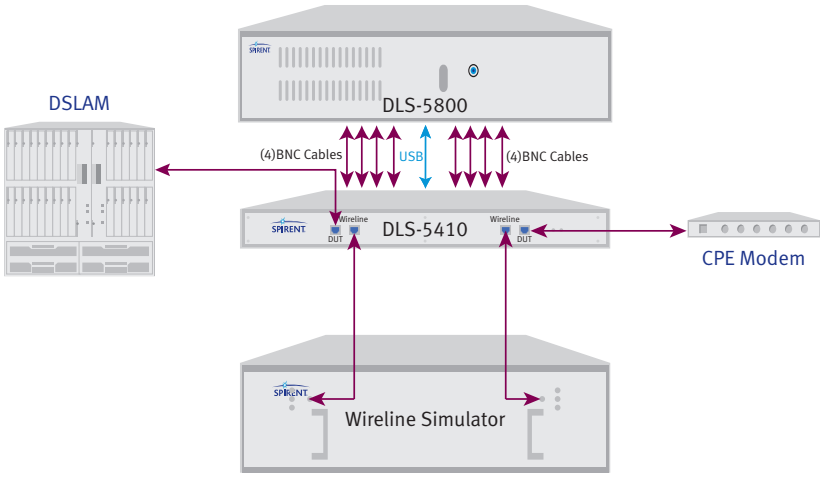

Physical Layer Test Setup including Wireline Simulation, Noise Generation, Traffic Generation and Analysis

DLS-5800 NOISE GENERATOR/SEQUENCER SYSTEM

INTEGRATED 5800/5410DC NOISE GENERATION SYSTEM

Supports Multiple Automation Environments

Permits the ability to expand testing from a single script environment expandable to 3 separate scripts running simultaneously to control 3 different test beds/environments. The ability to have a single noise generator to inject noise onto multiple wireline simulator platforms offers a cost effective solution and maintains a lower cost of ownership vs other xDSL noise generators available today. Testing 3 test beds simultaneously can now be done using a single DLS-5800. A DLS-5800 with 6 noise cards and 3 DLS-5410DC noise should be used to acheive maximum flexibility.

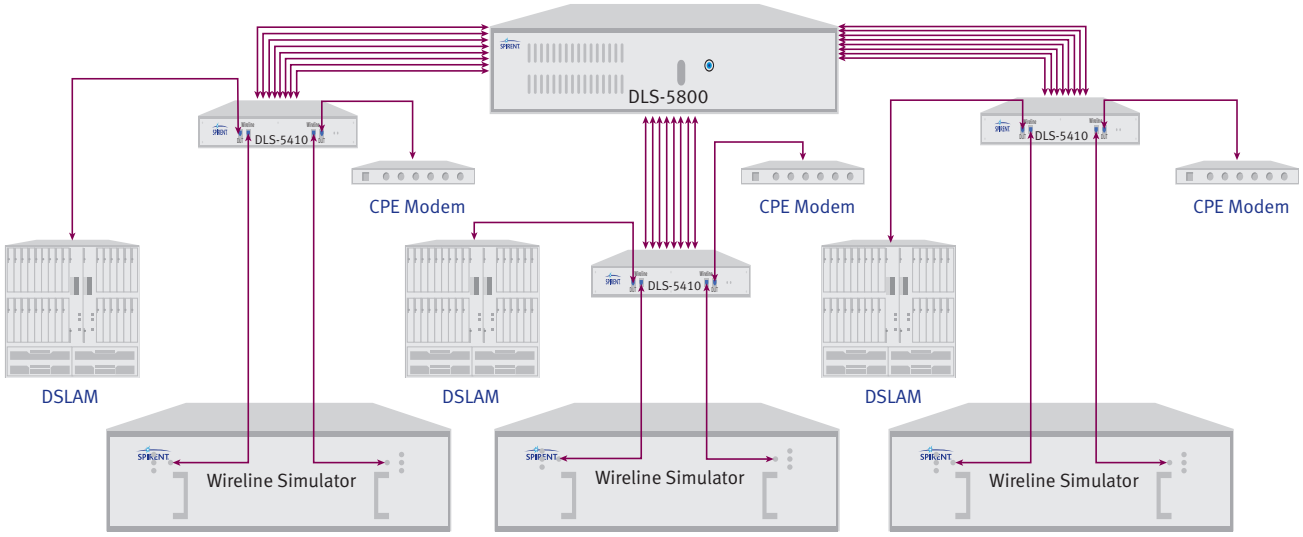

High Density Noise Injection

The DLS-5800 Noise Generator when configured with 6 noise cards and supplied with “mini” DLS-5409 noise injection units can be configured to inject noise into 24 inputs as displayed in the illustration below. Suitable for injecting noise onto various wireline simulator or modem inputs. These DLS-5409 “mini” injectors are completely passive and suitable to inject noise up to 30MHz.

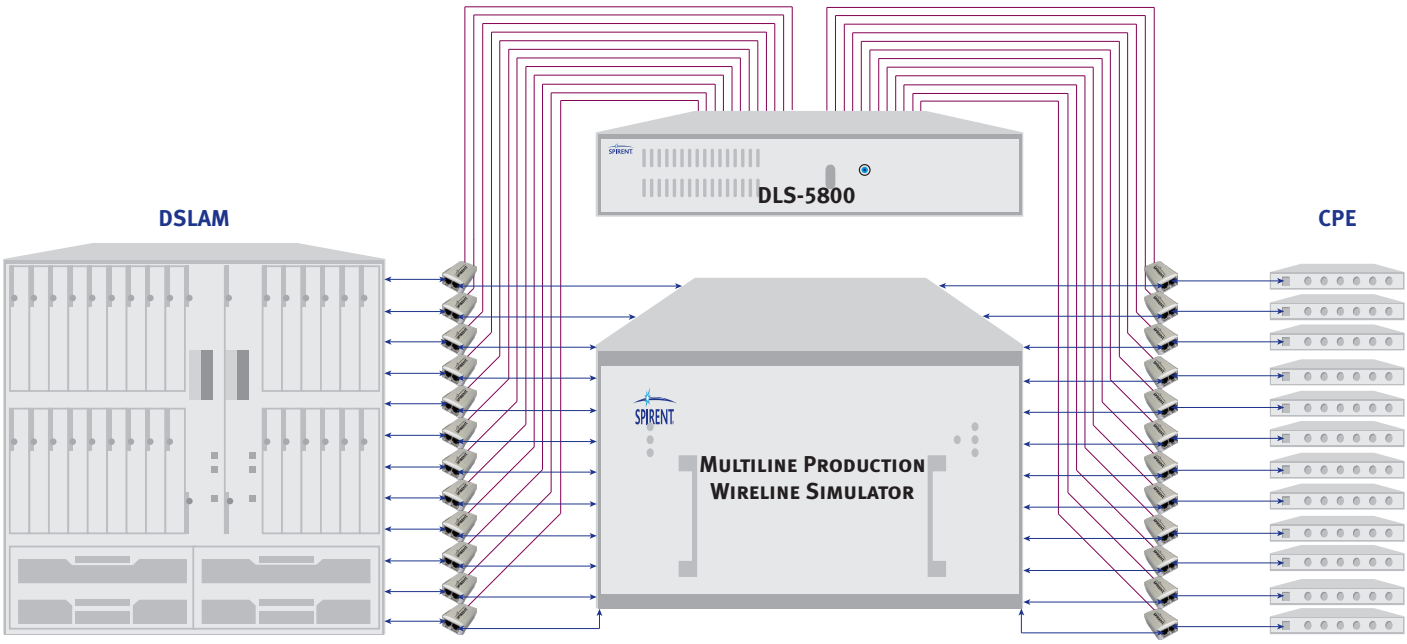

Repeatability

Spirent's test environments enable users to obtain consistent accurate results. Spirent has focused on developing highly accurate test equipment for testing xDSL products with a proven track record.

Common Control Interface

The DLS-5800/5410DC Control Software provides an easy-to-use Windows-based GUI allowing users to configure and make all setup/control settings from a single interface.

Ability To Expand System

The DLS-5800 can be expanded from a 2 card system to a full 6 noise card configuration as budget becomes available. The added flexibility of using the DLS-5800 with DLS-5410 or DLS 5409 noise injection units allows users a wide range of options when injecting noise onto LAB grade or Production multiline test equipment.

Integrated System

Easily integrated into an automated test environment with other Spirent products allowing control of the system in a customer's own scripting environment or by using Spirent Communications test tools. The DLS-5800 is also backward compatible with scripts written for the DLS-5500.

Noise Injection Functionality

The DLS-5800 provides the industries first xDSL noise generator capable of injecting wideband impairment noise types simultaneously in Common and Differential mode, (requires the use of DLS-5410DC noise injection unit).

DLS Products Are The Worldwide Standard For Physical Layer Equipment Used In Conformance, Performance And Interoperability Testing

With extensive market and technology expertise leveraged from Spirent's active participation at all major standards meetings including ETSI, ANSI, ITU-T, IEEE 802.3, and Broadband Forum, Spirent DLS equipment provides the industry's most accurate and repeatable results—ensuring your equipment is designed for peak performance.

INCLUDED WITH DLS-5800-2 SYSTEM

Your DLS-5800-2 comes complete with the following:

Simulators:

- 1 DLS-5800 Noise Generation System installed with 2 Noise Cards
- 1 DLS-5410DC Noise Injection Unit
- 2 x AC power cords
- 8 x BNC Coax cables
- 2 RJ 45 Noise injection cables
- Licences (DLS-5Bxx) series noise licences (qty varies by system)
- Integrated DLS-5800 Control software
- DLS-5C60 custom xtalk noise creation tool
- DLS-5C80 custom impulse noise creation tool

WHAT'S INVOLVED IN TRADING IN MY EXISTING DLS-5204/5500 AND /5404/5405 SOLUTION FOR THIS NEW PLATFORM?

The DLS-5204/5500 noise generators and DLS-5404/5405 noise injection units can be upgraded to a DLS-5800-2 noise generator platform using the trade in part number TRD–DLS5800-2. The DLS-5800-2 can then be upgraded from a 2 noise card system to a 4 and 6 noise card configuration as needed.

DLS-5800 NOISE GENERATOR/SEQUENCER SYSTEM

DLS-5800/2 SYSTEM SPECIFICATIONS	
Technology	xDSL custom noise generation system
Injection Type	Common mode and Differential mode injection
Crest Factor	Greater than 5 in ETSI compliant mode
Maximum Output	±10V (20 V p-p) unloaded, ±5 V (10 V p-p) into 50 Ω
Maximum RMS Ouptut	+ 13 dBm into 50 Ω with a crest factor of 5
Bandwidth	DC to 30MHz continuous frequency response
Output Impedance	50 Ω single-ended channels
Output Impedance DLS-5410DC	Differential mode ›4K Ω, Common mode 150 Ω +/- 5%
Power Supply	100~240 VAC (50~60 Hz)
Environmental	
Operating Temperature	+10° C to +40° C (50° F to 104° F)
Storage Temperature	-4° F to 158° F (-20° C to +70° C)
Humidity	90% (non-condensing) max .
Mechanical	
Weight Per Chassis	18 kg maximum
Dimensions Per Chassis	19 in x 7 in x 17.7 in (W xH x D)
Fuses	No user replaceable fuses in DLS 5800

ORDERING INFORMATION

- DLS-5800-2 (includes DLS 5800 with 2 noise cards and 1 DLS 5410DC noise injection unit)
- DLS-5800-4 (includes DLS 5800 with 4 noise cards and 2 DLS 5410DC noise injection units)
- DLS-5800-6 (includes DLS 5800 with 6 noise cards and 3 DLS 5410DC noise injection units)
- DLS 5409 Noise Injection Unit
- DLS-58-08 (includes a DLS 5800 with 2 noise cards and 8 DLS-5409 mini passive noise injectors)
- DLS-58-16 (includes a DLS 5800 with 4 noise cards and 16 DLS-5409 mini passive noise injectors)
- DLS-58-24 (includes a DLS 5800 with 6 noise cards and 24 DLS-5409 mini passive noise injectors)

NOTE: The DLS-58-08,DLS-58-16 and DLS-58-24 does not include the DLS-5C60 and DLS-5C80 Noise Creation Tools

UPGRADES

- UPG-DLS-5800-2-4 (upgrades a DLS-5800-2 to a DLS-5800-4)
- UPG-DLS -5800-2-6 (upgrades a DLS-5800-2 to a DLS-5800-6)
- UPG-DLS-5800-4-6 (upgrades a DLS-5800-4 to a DLS-5800-6)

TRADE-IN

TRD-DLS-5800-2 (trade in an older DLS-5204/5500 noise generator with a DLS-5404/5405 noise injection unit) and receive a DLS-5800-2

SPIRENT GLOBAL SERVICES

Spirent Global Services provides a variety of professional services, support services and education services—all focused on helping customers meet their complex testing and service assurance requirements. For more information, visit the Global Services Web site at www.spirentcom.com/gs or contact your Spirent sales representative.

AMERICAS 1-800-SPIRENT • +1-818-676-2683 • sales@spirent.com

EUROPE AND THE MIDDLE EAST +44 (0) 1293 767979 • emeainfo@spirent.com

ASIA AND THE PACIFIC +86-10-8518-2539 • salesasia@spirent.com

© 2010 Spirent Communications, Inc. All of the company names and/or brand names and/or product names referred to in this document, in particular the name "Spirent" and its logo device, are either registered trademarks or trademarks pending registration in accordance with relevant national laws. All rights reserved. Specifications subject to change without notice. Rev. B 08/10

SPIRENT