SPIRENT LANDSLIDE

PERFORMANCE TEST APPLICATION

CDMA2000

Spirent Communications' CDMA2000 performance test system is the only mobility test tool that simulates real-world traffic models for CDMA2000 mobile core packet data networks. The Landslide™ CDMA is part of the Landslide® family of test applications available on Spirent's proven Landslide platform.

The Landslide® CDMA provides a comprehensive end-to-end test system that emulates millions of mobile data subscribers, all simultaneously accessing the wireless network via various access models – including main and auxiliary service instances and support for EV-DO Rev A. By emulating all of the key wireless core packet data network elements and combining control plane and data plane simulation, the Landslide® CDMA test application provides real-world emulation of millions of mobile nodes in various stages of activation, deactivation and hand off between cells. Emulation takes place while transmitting and receiving real-world application data.

The CDMA-PCF Test application provides an emulated A8/A9 interface into a PCF thus providing a PCF testing solution.

APPLICATIONS

- Validate system scalability and identify capacity limits
- Measure call/data performance
- Characterize system before trial/delivery
- Identify performance ceilings
- Enable accurate capacity planning

FEATURES & BENEFITS

- Realistic, real-world simulations allow equipment vendors to accurately specify the performance characteristics of their equipment under real-world conditions
- Simultaneous control and user plane allows service providers to measure the performance of their network and to validate new features and services in the lab
- Unmatched scalability for the user to simulate subscriber loads ranging from a small rural town to the largest metropolitan city
- Standard Web browser interface means there is no need to load software onto user equipment
- Emulation of multiple network elements for the user to test in a variety of network topologies providing more effective utilization of lab equipment and reducing capital expenditure and ongoing support costs associated with a test lab
- Automation control so the user can run many test cases simultaneously or serially on multiple Landslide test servers, creating real-world scenarios for heavy load and long duration stability tests
- TCL Interface for the user to control/monitor the Landslide® from a higher level management system, making it possible to compile specific test reports for both the emulation (Landslide®) and the device under test
- CDMA Testing – The CDMA2000 test application provides a comprehensive nodal and end-to-end test capability for Packet Data Servicing Nodes supporting the Open Radio Packet (RP) protocol. You can test network elements in a variety of configurations using Simple IP or Mobile IP access models. The test cases provided allow you to test a PDSN, a PDSN-FA, or an HA in a standalone (nodal) configuration. You can also test one or more PDSN-FAs with a primary and secondary HA in an end-to-end configuration. Data plane traffic can be added to a test in any of these configurations

FEATURES & BENEFITS (CONTINUED)

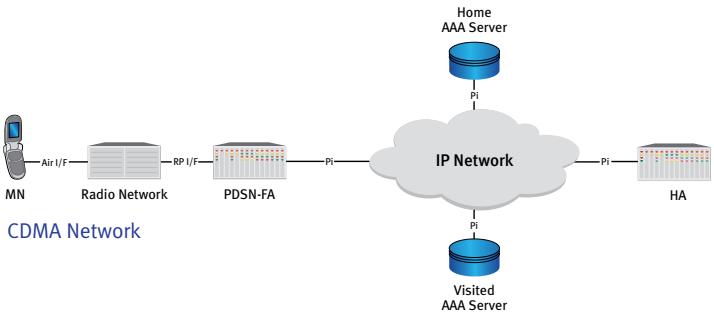

CDMA Network

Landslide can emulate all necessary network components including the Home Agent, the Foreign Agent, AAA servers with IP address allocation capability, DHCP servers, Internet hosts, PCFs and mobile subscribers.

- RP – The RP interface between the PCF and PDSN is fully supported, including main and auxiliary service instances. The Landslide GUI allows the user to configure the RP protocol to meet their needs, including airlink parameters, flow control and NVSE service options for EV-DO Rev A. Each auxiliary instance can be configured separately or they can all share the same parameters
- PPP – A PPP session is established between the MN and the PDSN through the RP interface. The PDSN routes packets to and from the MN to provide end-to-end IP connectivity between the MN and hosts on the Internet. The Landslide GUI allows users to configure the PPP protocol to meet their needs including authorization type and compression needs
- Mobility – Simple IP, the popular dialup network access model, is the basic access model supported by the PDSN in a CDMA2000 network. In the Simple IP model, an MN cannot maintain data sessions while moving between PDSN coverage areas (inter- PDSN mobility). Only inter-PCF/intra-PDSN mobility is supported. The Mobile IP access model provides an additional level of mobility over that offered by the Simple IP model. With Mobile IP, the PDSN includes an FA and the MN is able to move between PDSN-FA coverage areas while maintaining existing packet data sessions (maintaining the same IP address).
- PCF Testing – The CDMA-PCF application provides an emulated A8/A9 interface to a PCF. MIP signaling is done over the A8/A9 interface to provide a PCF end-to-end testing scenario.

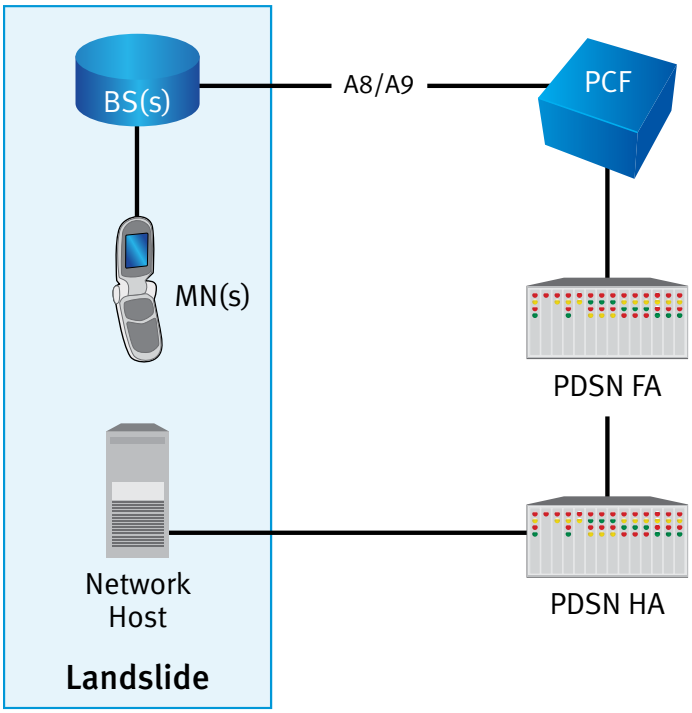

PCF Testing

TECHNICAL SPECIFICATIONS

- Test Activities
  - Capacity Test
  - Session Loading
  - Session Loading with Mobility
  - Intra-PDSN
  - MIP Revocation
- Landslide Manager
  - Up to 125 user accounts
  - Up to 48 simultaneous users
  - Up to 32 Landslide test appliances
- Landslide Test Server (without performance accelerator)
  - 200,000 simultaneous sessions
  - Up to 1.8 Gbps of bearer traffic
  - Activate/deactivate up to 1,000 sessions per second
  - Up to 3 simultaneous users per test appliance
  - Emulate up to 1,000 PCFs and 1,000 FAs
- Landslide Test Server Ethernet ports
  - 4-port 10/100/1000Base-T NIC (P/N L-NIC-12)
  - 4-port 10/100/1000Base-SX NIC (P/N L-NIC-11)
  - Single-port 10 Gigabit XF SR NIC (P/N L-NIC-10)
- Physical Specifications
  - 3U, 19-inch rack-mount
  - 5.25” H x 16.53” W x 19.75” D
  - 31 lb. (14kg)
  - Operating environment: 5° C to 30° C
  - 100-240 V, 50/60 Hz, 6 A
- Referenced Standards
  - TIA/EIA/IS-2001-A Inter-operability Specification (IOS) for CDMA2000 Access Network Interfaces
  - TIA/EIA/IS-707-A-1.12 CDMA2000 High Speed Packet Data Service Option 33
  - TIA/EIA/IS-835-D Wireless IP Network Standard
  - RFC 2002 IP Mobility Support
  - RFC 3344 IP Mobility Support for IPv4
  - RFC 3775 Mobility Support in IPv6
  - RFC 4283 Mobile Node Identifier Option for Mobile IPv6
  - RFC 4285 Authentication Protocol for Mobile IPv6
  - RFC 3012 Mobile IPv4 Challenge/ Response Extensions
  - RFC 2344 Reverse Tunneling for Mobile IP
  - RFC 1661 Point-to-Point Protocol
  - RFC 1662 PPP in HDLC-like Framing
  - RFC 1332 The PPP Internet Protocol Control Protocol (IPCP)
  - RFC 1334 PPP Authentication Protocols
  - RFC 1962 The PPP Compression Control Protocol (CCP)
  - RFC 1974 PPP Stac LZS Compression Protocol
  - RFC 1979 PPP Deflate Protocol
  - RFC 1994 PPP Challenge Handshake Authentication Protocol (CHAP)
  - RFC 2290 Mobile-IPv4 Configuration Option for PPPIPCP
  - RFC 3164 The BSD Syslog Protocol
  - RFC 2661 Layer Two Tunneling Protocol ‘L2TP’
  - RFC 2003 IP Encapsulation within IP
  - RFC 2401 Security Architecture for the Internet Protocol
  - RFC 2412 The OAKLEY Key Determination Protocol
  - RFC 1144 Compressing TCP/IP Headers
  - RFC 1701 Generic Route Encapsulation

The listed specifications were used as reference material in the development of this application. This does not necessarily imply full implementation of all requirements within the referenced specifications.

SPIRENT®

SPIRENT LANDSLIDE

CDMA2000

ORDERING INFORMATION	
Description	**Part Number**
LANDSLIDE CDMA2000 TEST SYSTEM - Includes one LANDSLIDE Manager and one LANDSLIDE test server with CDMA2000 application and two quad copper NICS.	L-KIT-1002
TEST SERVER W/ CDMA2000 - Includes LS test server w/ CDMA2000 application. Must be purchased as an expansion to a CDMA2000 Test System. Requires two NICs, sold separately. Serial number or MAC ID of existing LANDSLIDE Manager required.	L-TS-1002
LANDSLIDE CDMA2000 TEST APPLICATION - Adds CDMA2000 test application to an existing ASN-GW, CSN, GPRS MIPv6 or UMTS Landslide Test System. Serial number or MAC ID of existing Landslide Manager required.	L-APP-002
LANDSLIDE CDMA2000 TEST SYSTEM SOFTWARE - Includes software only for one Landslide Manager and one Landslide test server with CDMA2000 application. SVC-6064 purchase required for installation of software on Manager and TS. NICs sold separately.	L-KIT-001-SW
LANDSLIDE CDMA2000 TS SOFTWARE - Landslide test server software for CDMA2000 app. Must be purchased as expansion to a CDMA2000 Test System. Serial number or MAC ID of existing Landslide Manager required. SVC-6064 purchase required. NICs sold separately.	L-TS-CDMA-SW
LANDSLIDE CDMA PCF TEST SYSTEM - Includes one LANDSLIDE Manager and one LANDSLIDE test server with CDMA PCF Test Application and two quad copper NICs.	L-KIT-1022
TEST SERVER W/ CDMA PCF - Includes LS 2900 appliance w/ CDMA PCF application. Must be purchased as an expansion to CDMA PCF Test System. Requires 2 NICS, sold separately. Serial number of MAC ID of existing LANDSLIDE Manager required.	L-TS-1022
CDMA PCF TEST APPLICATION - Adds CDMA PCF Test Application to an existing Landslide test system. Tests PCF A8/A9 interface end and end-to-end configuration only. S/N or MAC ID of existing Landslide Manager required.	L-APP-022
Landslide CDMA PCF TEST SYSTEM SOFTWARE - Includes software only for one Landslide Manager and one Landslide test server for testing CDMA PCF. SVC-6064 purchase required for installation of software on Manager and TS. NICs sold separately.	L-KIT-1022-SW
LANDSLIDE CDMA PCF TS SOFTWARE - Landslide test server software for UMTS application. Must be purchased as an expansion to a PCF Test System. Serial number or MAC ID of existing Landslide Manager required. SVC-6064 purchase required. NICs sold separately.	L-TS-1022-SW
LANDSLIDE IP DATA APPLICATION - Adds IP Data Application to an existing Landslide Test system. Serial number or MAC ID of existing Landslide Manager required.	L-APP-007
DYNAMIC IPSEC EMULATION - Adds IPSec emulation to an existing Landslide Test System. IPSec accelerator must be ordered separately. Serial number or MAC ID of existing Landslide Manager required.	L-FT-004
LANDSLIDE IPSEC ACCELERATOR CARD - Provide hardware accelerated IPSec processing for Landslide Test Server. Requires L-FT-004 Dynamic IPSec Emulation feature. See sales representative for more information.	L-ACC-004
DATA THROUGHPUT ACCELERATOR LICENSE - Improves test server data throughput for Landslide Test Applications. Price per test server. S/N or MAC ID required.	L-FT-032-A
PERFORMANCE ACCELERATOR LICENSE - Improves test server data throughput and control plane performance for mobility test applications. Price per test server. S/N or MAC ID required.	L-FT-032-B

SPIRENT SERVICES

Spirent Global Services provides a variety of professional services, support services and education services — all focused on helping customers meet their complex testing and service assurance requirements. For more information, visit the Global Services' Web site at www. spirentcom.com/gs or contact your Spirent sales representative.

AMERICAS 1-800-SPIRENT • +1-818-676-2683 • sales@spirent.com

EUROPE AND THE MIDDLE EAST +44 (0) 1293 767979 • emeainfo@spirent.com

ASIA AND THE PACIFIC +86-10-8518-2539 • salesasia@spirent.com

© 2009 Spirent Communications, Inc. All of the company names and/or brand names and/or product names referred to in this document, in particular the name "Spirent" and its logo device, are either registered trademarks or trademarks pending registration in accordance with relevant national laws. All rights reserved. Specifications subject to change without notice. Rev. G 11/09

SPIRENT